Wiring Diagram I MINI TD 34 — {6pc}

3-Channels of C.V [24Vdc / 96W / 4A] / 0-10V Dimming ; 6 of 3*[C.C 350mA, 18V, 7W], [3*7W]

Input Voltage: 110…277 Vac

Max Connected LOAD: 126W

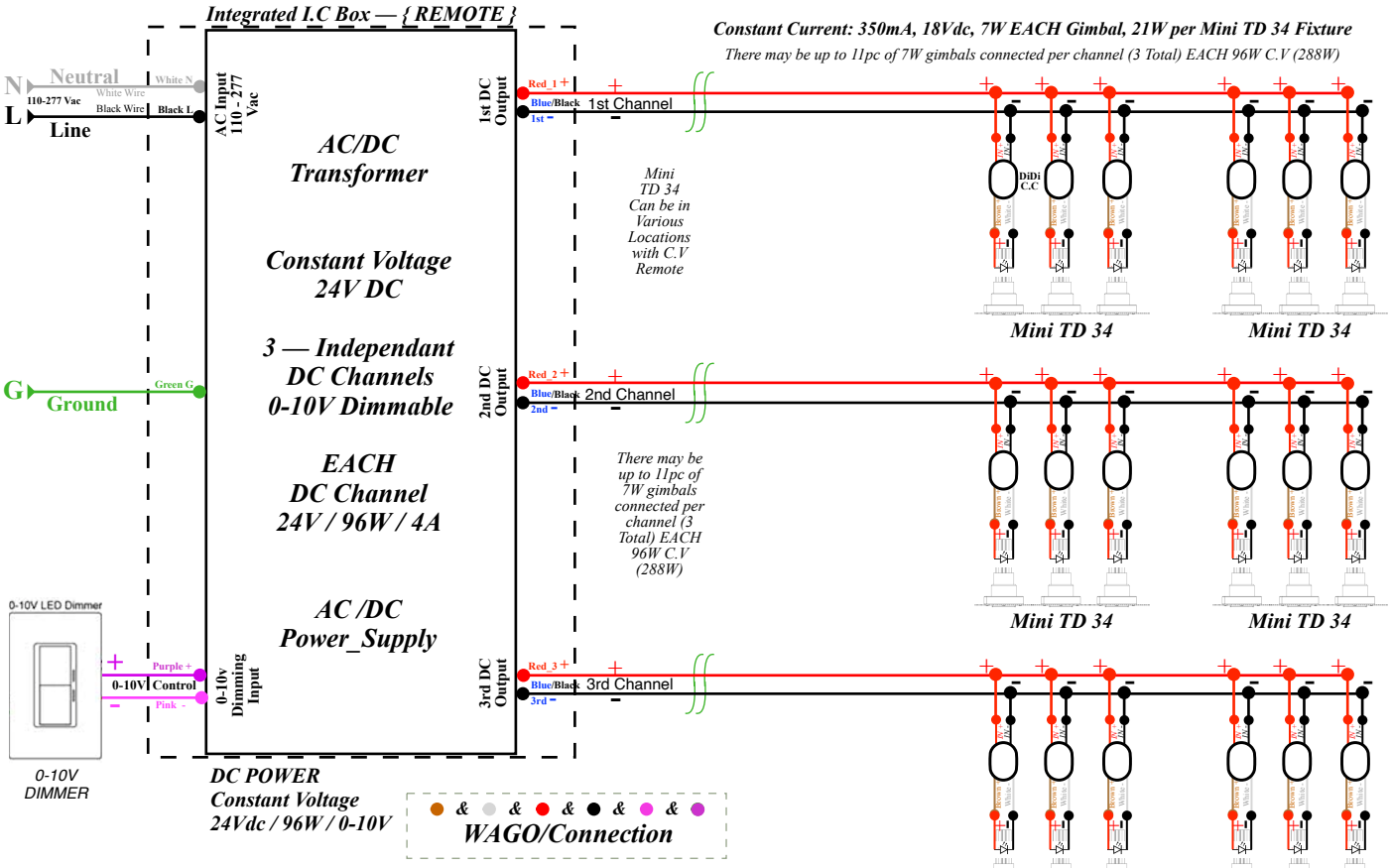

Note:

- *Integrated I.C Box: C.V Transformer & Input, Output & Control Connections*
- *C.V Transformer with 0-10V Control: Positive is Purple(+) & Negative is Pink/Gray(-)*
- *The C.V will be REMOTE: The Load / Fixture power will determine the Distances & AWG & Conductors required*
- *The LED driver may only be connected and installed by a qualified electrician based on (N.E.C)*
- *All necessary, regulations, legislation, and building codes must be observed & followed*
  - ~ ***Incorrect installation of the LED driver can cause irreparable damage to the LED driver and the connected LEDs***
  - ~ ***Pay attention when connecting the LEDs: polarity reversal results in no light output and often damages the LEDs***

DiDi Constant Current Driver

WARNING:

- CONNECTION OF LUMINAIRE TO POWERED DRIVER/SUPPLY WILL RESULT IN PERMANENT DAMAGE TO THE LED AND VOIDED PRODUCT WARRANTY.
- EACH OF THE LED OUTPUTS ON DMX DRIVER ARE INDIVIDUAL CHANNELS & POLARITY MUST BE FOLLOWED

Illustration is for example purposes only. Components may vary depending on technical requirements of the light.

101 North Garden Avenue • Clearwater, Florida 33755 USA • P 727.213.0410 • Support@ZaniboniLighting.com

The manufacturer reserves the right to change or modify the design, dimensions and specifications at any time without notice.
The manufacturer accepts no liability for consequential damage which is occasioned to the user based on the data provided.
For more information contact your representative or go to **ZaniboniLighting.com**.